www.reelsmatic.com

garcia® MITCHELL 400-401

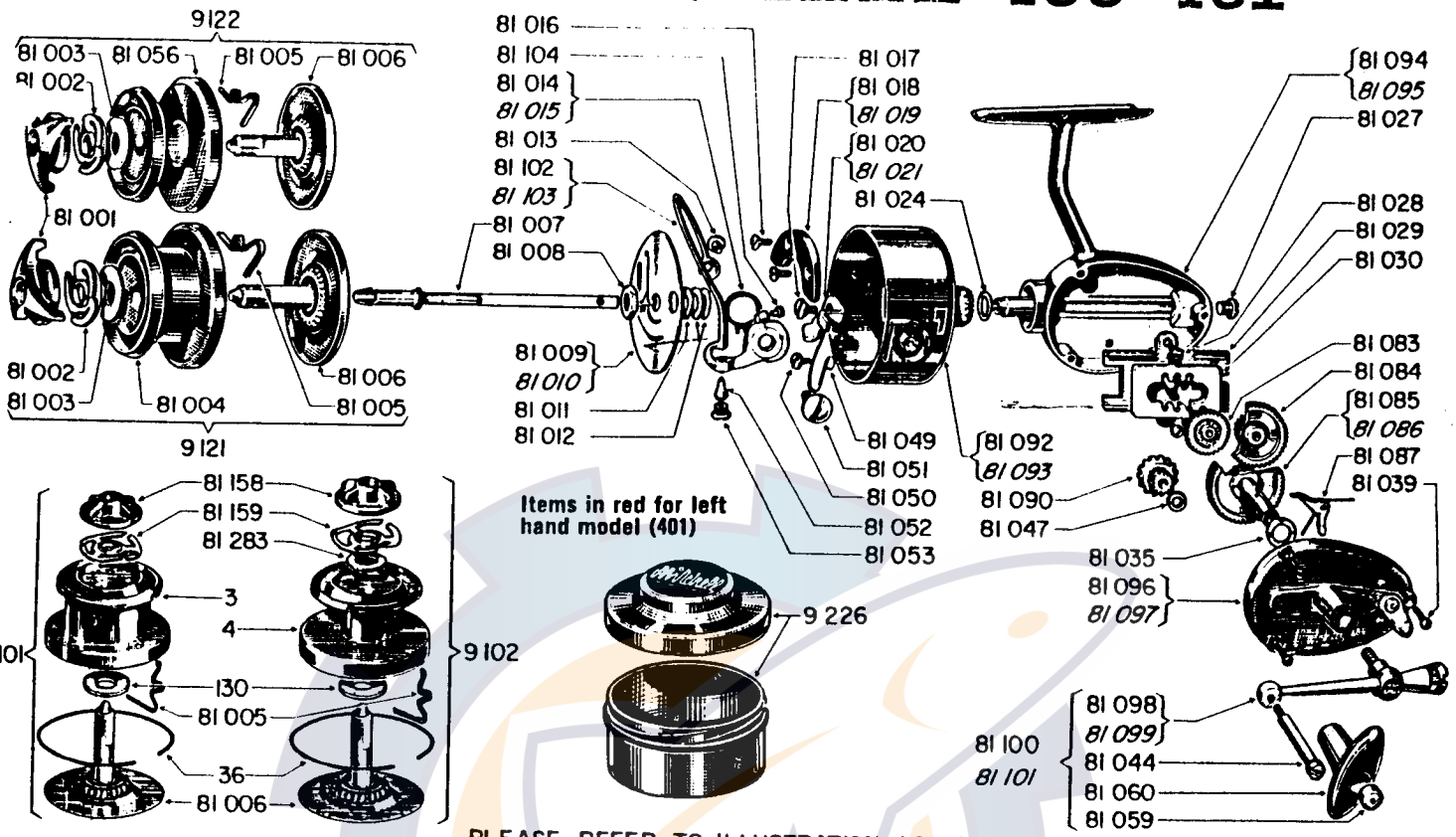

Items in red for left hand model (401)

PLEASE REFER TO ILLUSTRATION AS CERTAIN PARTS OF 9 101-9 102 ARE NOT INTERCHANGEABLE IN 9 121 AND 9 122 SPOOLS.

Prices subject to change without notice

***Use only the number of shims required for smoothest performance**

Please specify both the reel model and part numbers when ordering.

No.	*Part Name*	*Price*
3	Spool Shell, Small (9101)	1.25
4	Spool Shell, Large (9102)	1.85
36	Line Clip (9101) (9102)	.10
130	Teflon Base Washer (9101) (9102)	.10
9121	Spool Complete, Small, Less Container	2.75
9122	Spool Complete, Large, Less Container	2.75
9226	Spool Container	.60
9231	Combination Tool	1.10
81001 (112)	Drag Adjusting Knob (9121) (9122)	.25
81002 (111)	Brake Spring (9121) (9122)	.30
81003 (135)	Teflon Drag Washer (9121) (9122)	.10
81004 (110)	Spool Shell, Small (9121)	1.10
81005 (38B)	Click Spring	.10
81006 (6)	Spindle	1.00
81007 (7)	Axle	.75
81008 (35)	Hex Nut	.10
81009 (41)	Baffle Plate (400)	.40
81010 (41L)	Baffle Plate (401)	.40
81011 (48)	Baffle Plate Washer	.10
*81012 (49B)	Shims To Adjust Head and Baffle Plate (set of 3)	.30
81013 (47)	Bail Screw No. 2	.15
81014 (43)	Bail Spring (400)	.15
81015 (43L)	Bail Spring (401)	.15
81016 (97)	Counterweight Screw (ea.)	.10
81017 (45)	Trip Lever Screw	.10
81018 (96)	Counterweight (400)	.45
81019 (96L)	Counterweight (401)	.45
81020 (42)	Trip Lever (400)	.25
81021 (42L)	Trip Lever (401)	.25
*81024 (49A)	Shims To Adjust Head and Housing (set of 3)	.30
81027 (15)	Lube Port Screw	.10
81028 (28)	Oscillation Guide Screw (ea.)	.05
81029 (29)	Oscillation Guide	.30
81030 (27)	Oscillation Slide	.45
*81035 (54)	Shims To Adjust Drive Gear (Optional)	.20
81039 (14)	Cover Screw (ea.)	.10
81044 (58)	Handle Knob Screw	.10
*81047 (51)	Shims To Adjust Pinion Gear (set of 2)	.20
81049 (44)	Trip Lever Spring	.10
81050 (50)	Trip Lever Spring Screw	.05
81051 (46)	Bail Screw No. 1	.20
81052 (13)	Line Guide	.75
81053 (12)	Line Guide Screw	.10
81056 (109)	Spool Shell, Large (9121)	2.00
81059 (107)	Knob Lube Port	.10
81060 (84)	Handle Knob	.50
81083 (30R)	Pivot Gear	.75
81084 (31R)	Transfer Gear	.50
81085 (25R)	Drive Gear (400)	1.25
81086 (25RL)	Drive Gear (401)	1.25
81087 (24R)	Anti Reverse Dog	.25
81090 (26R)	Pinion Gear	.75
81092 (123)	Rotating Head (400)	3.25
81093 (123L)	Rotating Head (401)	3.25
81094 (125)	Housing (400)	3.50
81095 (125L)	Housing (401)	3.50
81096 (126)	Coverplate (400)	3.00
81097 (126L)	Coverplate (401)	3.00
81098 (117)	Handle Shank (400)	1.40
81099 (117L)	Handle Shank (401)	1.40
81100 (118)	Handle, Complete (400)	2.00
81101 (118L)	Handle, Complete (401)	2.00
81102 (120)	Bail (400)	2.60
81103 (120L)	Bail (401)	2.60
81104 (122)	Bail Bumper	.10
81158 (1)	Drag Adjusting Knob (9101) (9102)	.20
81159 (2)	Brake Spring (9101) (9102)	.25
81283 (5)	Fibre Drag Washer (9102)	.10

PARTS AND SERVICE AVAILABLE AT THE FOLLOWING REGIONAL FACTORY REPAIR DEPOT

REEL SERVICE AND PARTS

SHERMAN LOYD SALES COMPANY
4737 GREENVILLE AVENUE
DALLAS, TEXAS 75206

HARRY C. MILLER CO., INC.
257 PARK AVENUE SOUTH
NEW YORK, NEW YORK 10010

NATE BUELL SERVICE CORPORATION
5013 N. E. 42nd STREET
PORTLAND, OREGON 97218

RODS, REELS AND PARTS SERVICE

THE GARCIA SERVICE DEPARTMENT
329 ALFRED AVENUE
TEANECK, NEW JERSEY 07666

THE CONOLON CORPORATION
1111 EAST McFADDEN STREET
SANTA ANA, CALIFORNIA 92705

SILICOTE SALES DIVISION
520 WEST 14th AVENUE
OSHKOSH, WISCONSIN 54902

J. K. CLARK COMPANY
ACO SPORTSMEN SERVICE
13501 VAN DYKE
DETROIT, MICHIGAN 48234